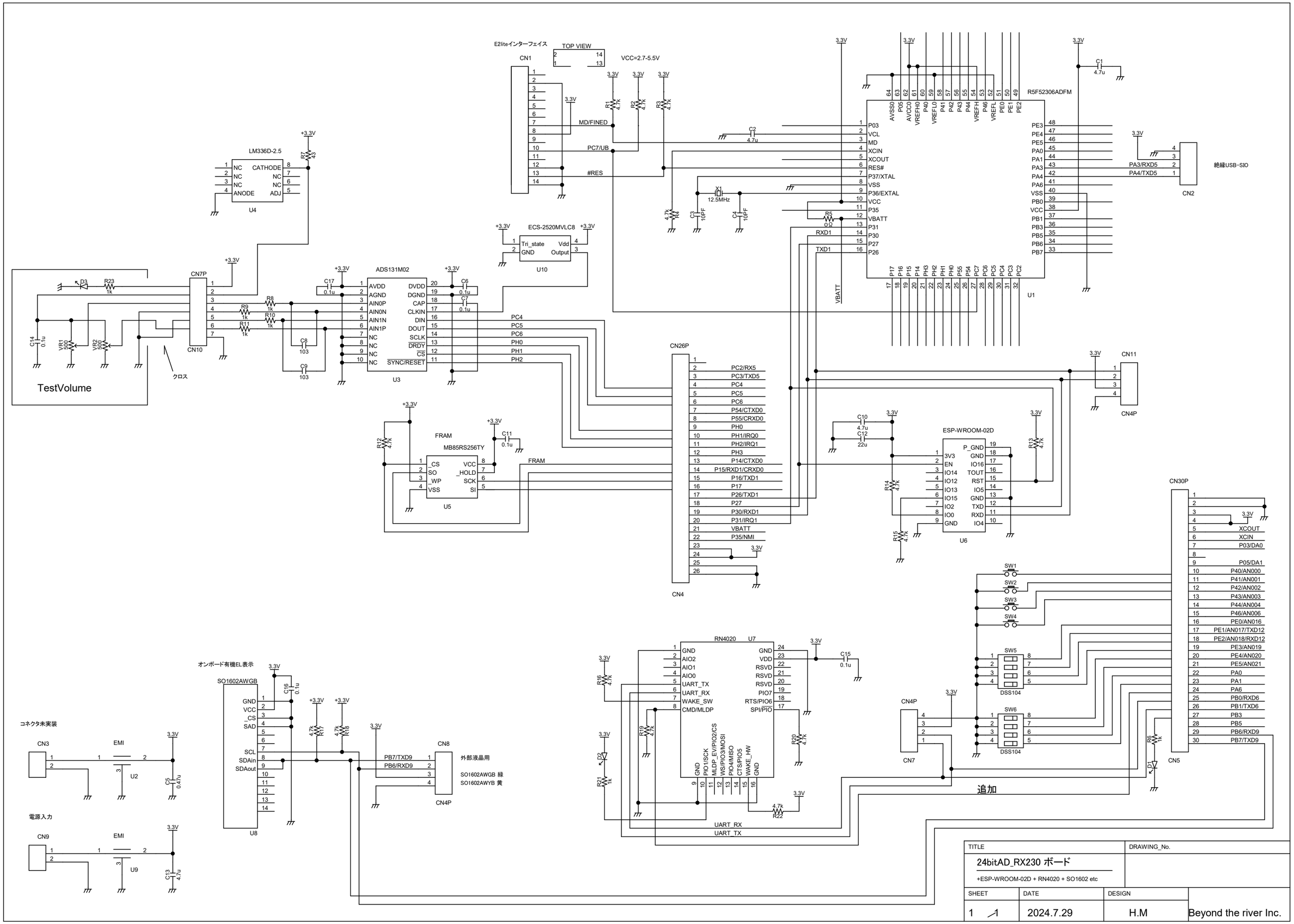

TITLE	DRAWING_No.		
24bitAD_RX230 ボード +ESP-WROOM-02D + RN4020 + SO1602 etc			
SHEET	DATE	DESIGN	
1 / 1	2024.7.29	H.M	Beyond the river Inc.